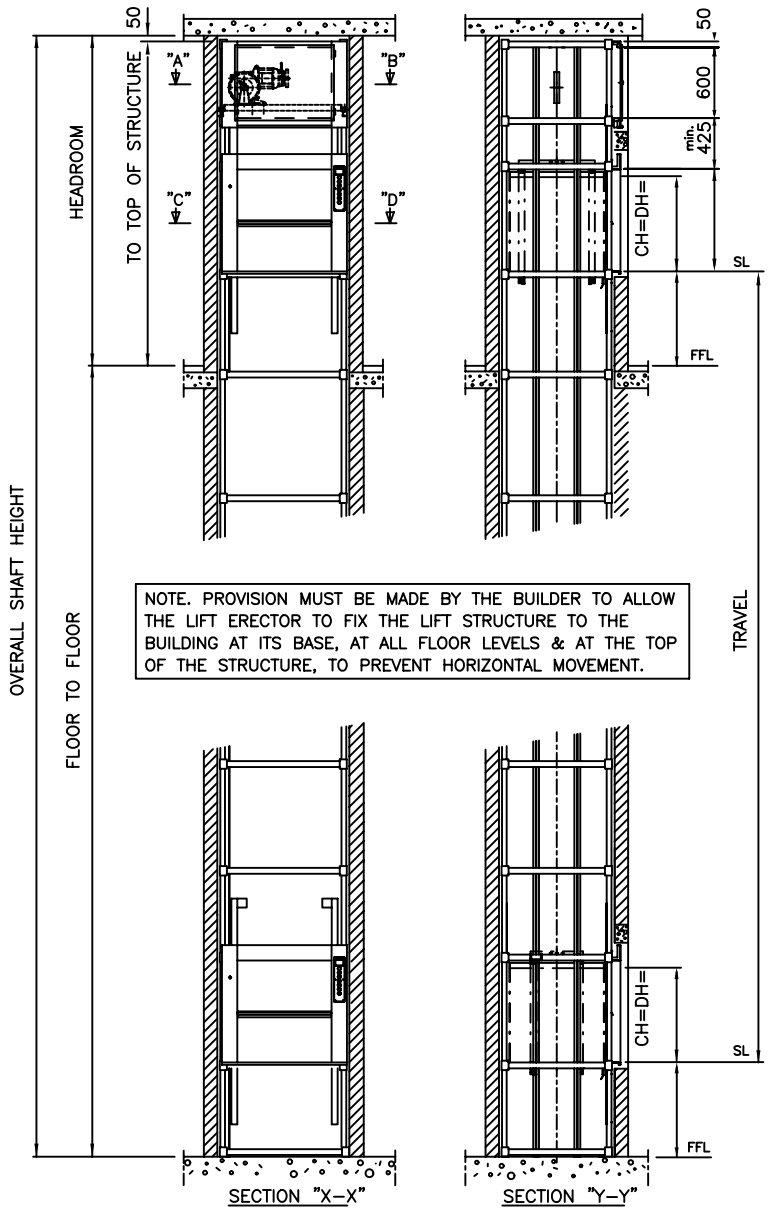

NOTE. PROVISION MUST BE MADE BY THE BUILDER TO ALLOW THE LIFT ERECTOR TO FIX THE LIFT STRUCTURE TO THE BUILDING AT ITS BASE, AT ALL FLOOR LEVELS & AT THE TOP OF THE STRUCTURE, TO PREVENT HORIZONTAL MOVEMENT.

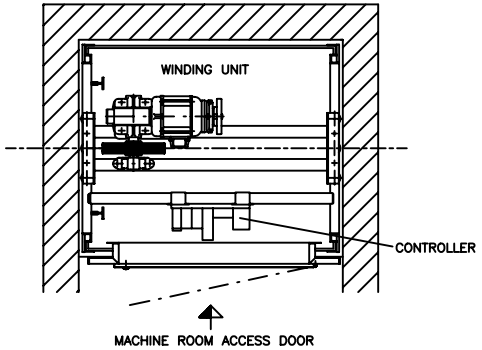

PLAN AT MACHINE LEVEL

SECTION THROUGH A–B

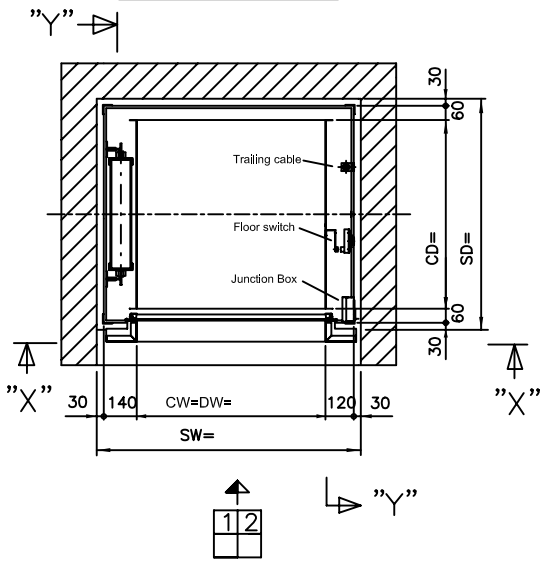

PLAN OF WELL

SECTION THROUGH C–D

NOTE! LIFT CAN NOT BE INSTALLED UNLESS ENTRANCE WALL IS LEFT FULLY OUT!

Model Type	Load	CW	CD	CH	SW	SD	Headroom
50.45/0	50 kg	600	600	800	920	780	2790
100.45/0	100 kg	800	800	800	1120	980	2790
100.45/1	100 kg	1000	1000	1200	1320	1180	3390

CD = Car Depth DW = Door Width SD = Shaft Depth SL = Serving Level
CW = Car Width DH = Door Height SW = Shaft Width CH = Car Height

NOTE

1. Headroom based on a serving level (SL) of 800.
2. Variable dimension cars available please call for information.
3. Shaft depth dimensions suitable for through car arrangement.
4. Rated Speed 0.45 m/s.
5. All data subject to change without prior notice please contact Niche Lifts for latest information.

LIST OF BUILDERS WORK.

1. Form trimmed hole through floor to size given. In the case of multi–floor installations each hole must be plumb, one above the other.
2. Prepare, level and finish the pit floor at the lowest level served to receive the lift structure.
3. Provide and fix enclosure work after erection of lift to form totally enclosed lift shaft to comply with any requirements of any local and fire authority regulations. All enclosure materials must be incombustible.
4. On existing lift shafts the entrance wall must be left out from floor to ceiling by full width of shaft.
5. A safe machine room access has to be ensured. Ladders are only admissible when the sill of the inspection door is not more than 2.7metres above floor level. Also around the ladder,within a horizontal distance of 1.5 metres, there must be clear solid ground to avoid the risk of falling by more than the height of the ladder. A clear area of at least 700mm D x 600mm W is required in front of the sill access door.
6. All shown dimensions for heights are based on finished floor to floor heights.
7. Shaft ventilation to be in accordance with local authority requirements. The machine room temperature must be maintained between 5 and 40 degrees C
8. Provide electrical supply for the machine room, positioned on the outside of machine room shaft wall. In the absence of a shaft wall, it must be positioned within a maximum distance of 1 metre from machine room Identification labels must be affixed.
a) Provide and fit a triple pole & neutral switchfuse (lockable in OFF position) to suit 0.73 KW motor, 8.7 Amp starting current, 2.9 Amp running current. Drill a 20mm dia. hole through the back of the box and through lift shaft wall into the motor room.
b) Provide and fit a 13 Amp fused spur (switched) adjacent to the above and connected to the input side of (a). Drill a 20mm hole through the back of the box and through the lift shaft wall into the motor room.
9. Provide clear access from road to lift shaft for largest item of equipment : 1400mm wide x 1400mm deep x 1600mm high.
10. The illumination (either artificial or natural) in the area surrounding the lift entrance should be a minimum of 50 lux.
11. Provide temporary guarding around lift shaft to give a minimum of 1.5 metres clear working space around perimeter of shaft.
12. Provide scaffold boards to form working platforms, at minimum of 2.5 metres vertical centres. 3 OFF boards reqd.
13. Provide ladders as required by lift installers.

NOTE:– IF ACCESSIBLE SPACE EXISTS BENEATH THE LIFT SHAFT THEN SAFETY GEAR SHOULD BE FITTED TO COMPLY WITH BS EN81– 3:2001

ELECTRICITY SUPPLY: 415 Volts 3 Phase 50 Htz 4 Wire

BY	DATE	ISSUE	MODIFICATION	CHECKED
TMP	7/12/04	B	Shaft & headroom dimensions corrected	

Niche Service Lift Standard Arrangement
(Issued for information only)

NICHE LIFTS Ltd

Do not scale this drawing. All dimensions in millimetres

DRAWN BY	DATE	CHECKED	SCALE
TMP	12/02/04	FWP	1:25

DRAWING NUMBER 1003/B

NICHE LIFTS LTD 82 St Georges Road West, Bromley, Kent. BR1 2NP Tel: 020 8295 2852 Fax: 020 8467 1044
e–mail: sales@nichelifts.co.uk Web Site: www.nichelifts.co.uk